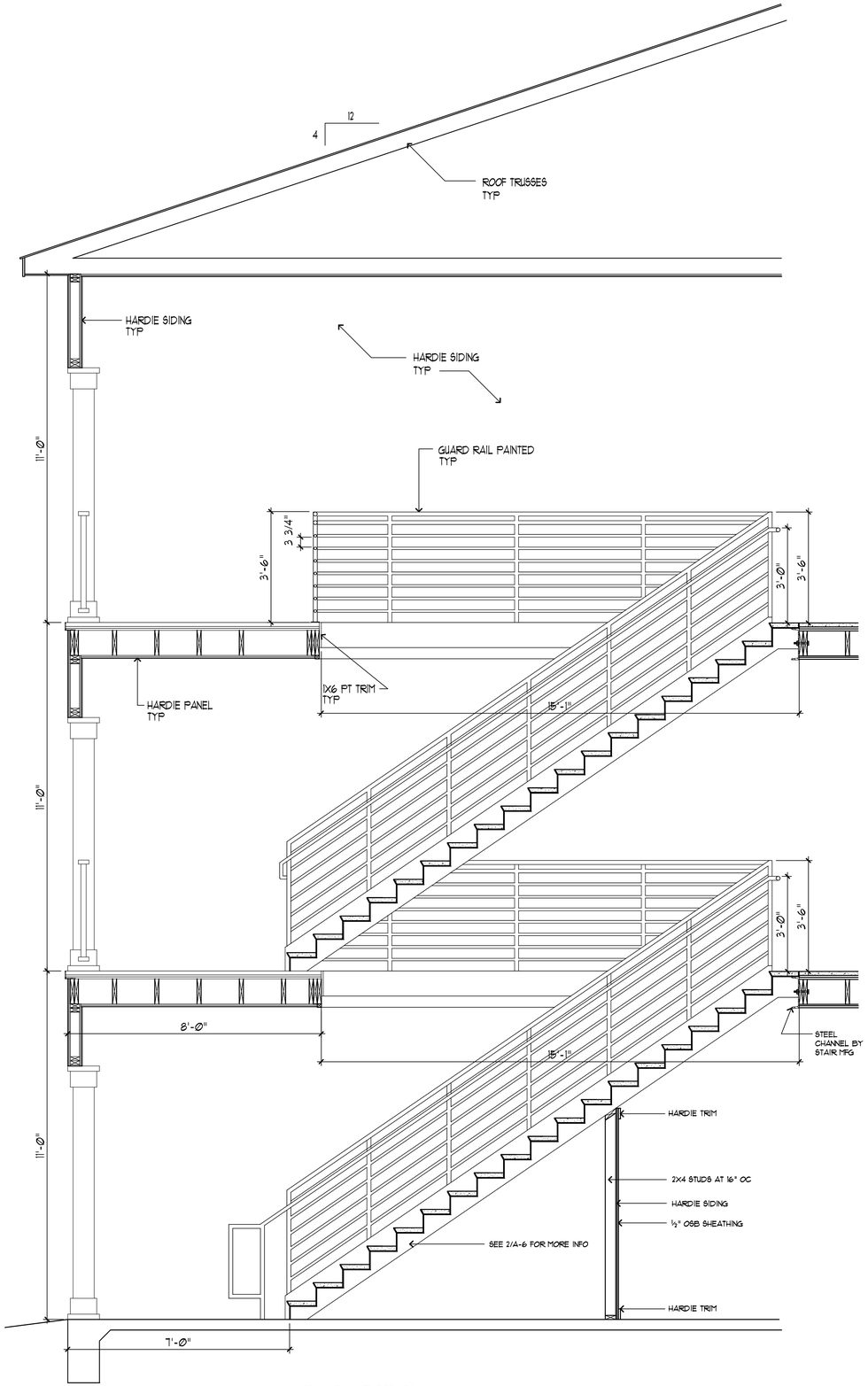

4 / A-6 STAIR SECTION

½"=1'-0"

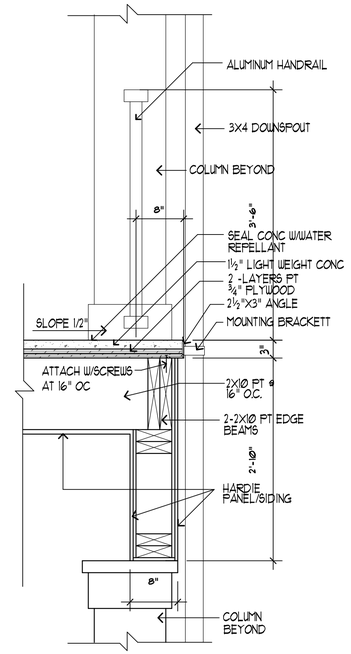

3 / A-6 PORCH DETAIL

1"=1'-0"

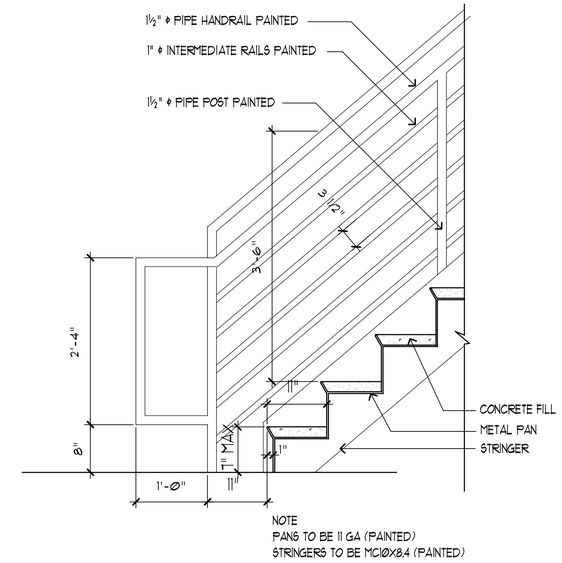

2 / A-6 STAIR DETAIL

1"=1'-0"

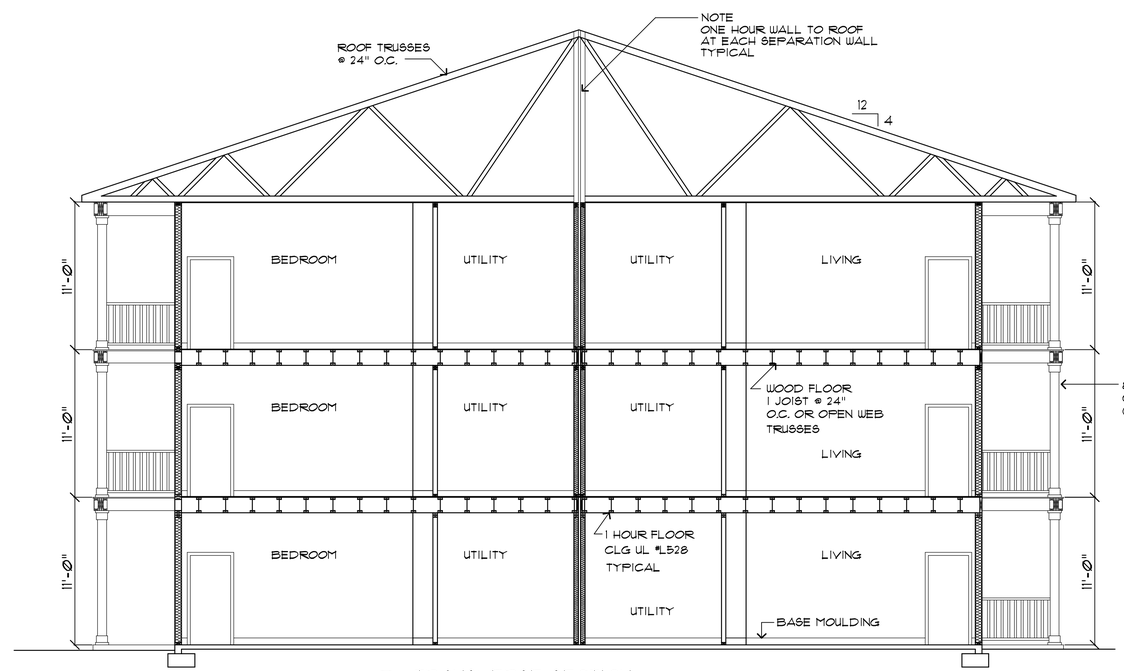

1 / A-6 TRANSVERSE SECTION

3/16"=1'-0

ALAN BELL ARCHITECT Inc
ARCHITECTURE, ENGINEERING, PLANNING
ASSOCIATES
MARK SMITH, DOUGLAS ELKINS
LORI MOON, LARRY TRANSUE, ADAM LONG
alanbellarchitect.com
211 GORDON ST 770-537-8856
BREMEN, GA
301 BRADLEY ST 770-830-8856
CARROLLTON, GA
8 EAST 4TH AVE 706-232-2256
ROME, GA

REVISIONS	BY

NEW APARTMENTS FOR
PIER POINT
LINCOLN, ALABAMA

CONTRACTOR SHALL VERIFY ALL CONDITIONS AND DIMENSIONS BEFORE EXECUTING ANY WORK. THIS DOCUMENT IS THE SOLE PROPERTY OF ALAN BELL ARCHITECT AND SHALL NOT BE COPIED IN WHOLE OR IN PART WITHOUT EXPRESSED WRITTEN CONSENT FROM ALAN BELL ARCHITECT.

STATE of ALABAMA
ALAN BELL
REG. NO. 4194
REGISTERED ARCHITECT

DATE: MARCH 11, 2010

SCALE: AS NOTED

JOB NO.: 08034-H11

SHEET

A-6

OF 11 SHEETS